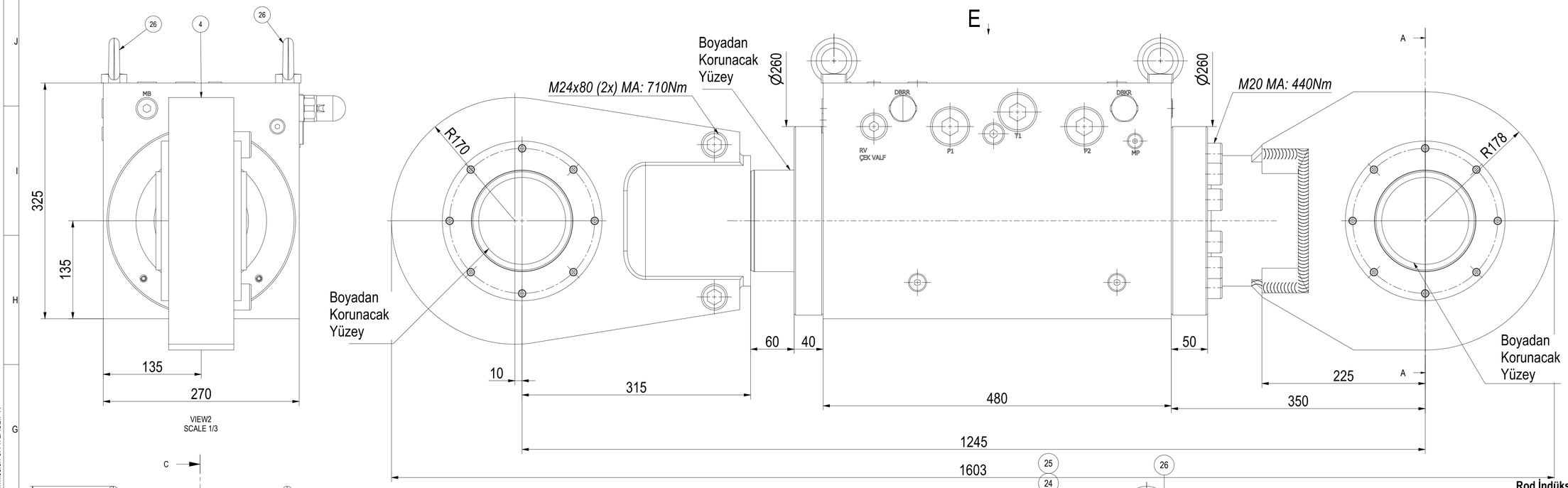

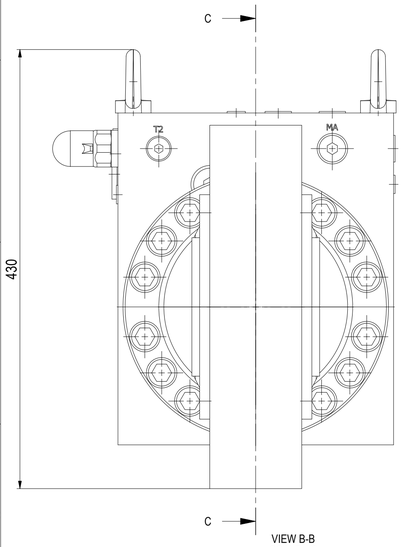

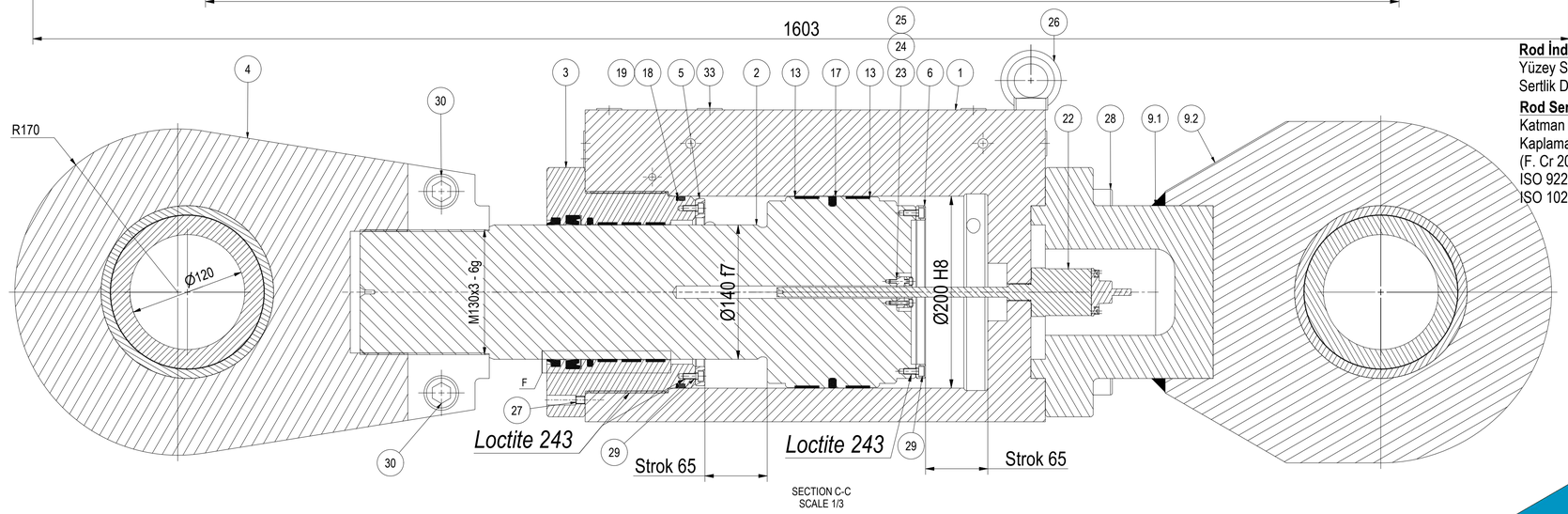

Rod İndüksiyonla Sertleştirme / *Rod Induction hardening*
Yüzey Sertliği / *Surface hardness*: 60 HRC
Sertlik Derinliği / *Hardness depth* : 1,5 -2 mm

Rod Sert Krom Kaplama / Rod Hard Chrome Plating
Katman Kalınlığı / Layer Thickness : 25 ±5 µm
Kaplama Sertliği / Coating Hardness : 850-1000 HV [0,1]
(F. Cr 20 ÷ 30 m - ISO 6158)
ISO 9227 240 h
ISO 10289 R9

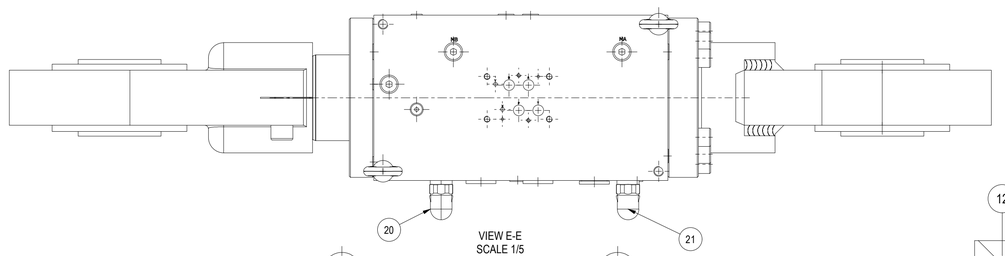

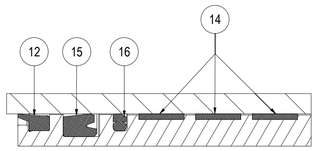

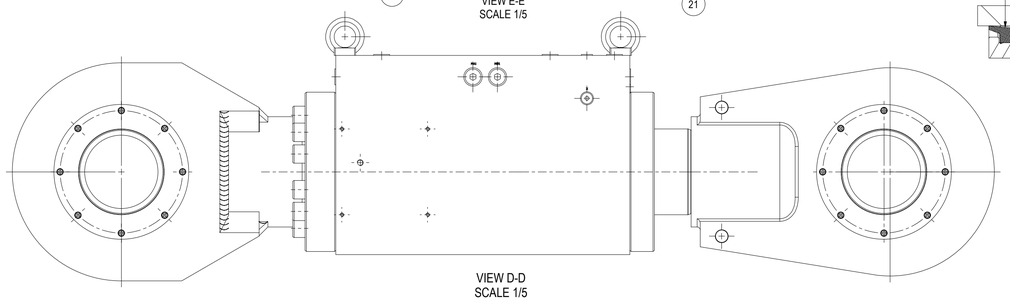

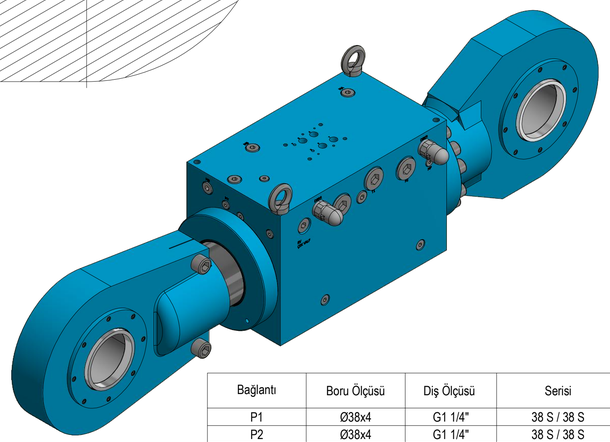

POS. POZ.	PARÇA ADI/ PART NAME	ADET/ QTY	RESİM NR. DRAWING NR.	MALZEME/ MATERIAL	AÇIKLAMA/ STATEMENT
1	Kovan	1	10106102	C 45 E	EN 10083-2
2	Rod-Piston	1	10106103	42CrMo4+QT	EN 10083-2
3	Ön Kapak	1	10106104	C 45 E	EN 10083-2
4	Rodbaşı	1	10106106	S355J0	EN 10083-2
5	Ön Kapak Flanş	1	10106108	S355J0	EN 10025-2
6	Piston Flanş	1	10106109	S355J0	EN 10025-2
7	Rulman Kapak	4	10106110	S355J0	EN 10025-2
8	Bilezik	4	10106111	AISI 304	-
9	Arka Kapak ve Kulak Kaynak Opr.	1	10106112	Welded	
9.1	Arka Kapak	1	10106105	S355J0	EN 10025-2
9.2	Arka Kulak	1	10106107	S355J0	EN 10025-2
10	Rulman	2	GE 120UK-2RS		INA
11	Toz Keçesi	4	135x150x10/11	NBR	Kastaş K95-135
12	Toz Keçesi	1	140x155x9,5/14	TPE	K11-140 Kastaş
13	Bant Yatak	2	200x195x25	Poly. Resin	
14	Bant Yatak	3	140x145x20	Poly. Resin	
15	T 20 Rod Nutring	1	140x160x14,6/16	PU	SIMRIT 24223323
17	OMK-MR Omegat	1	200x179x8,1	PTFE BRONZ NBR	Simrit 24179248
16	OMS-MR-Omegat	1	140x155,1x5,9	PTFE BRONZ NBR	Simrit 24179239
18	Oring	1	189,3x5,7	NBR	
19	Destek Ringi	1	200x191x2	PTFE	
20	Valf	1	DBDS10K1X/400		Rexroth
21	Valf	1	DBDS10K1X/315		Rexroth
22	Lineer Cetvel	1	BTL7-S575-M0175-B -KA05		Balluff
23	Magnet	1	Ø33	-	Balluff BTL-P-1013-4R
24	Teflon	1	Ø33	-	BAM 013L Balluff
25	Civata	4	M4 x 20	8.8	DIN 912
26	Mapa	2	M16	-	DIN 580
27	Sestkur	3	M8x10	-	DIN 913
28	Civata	12	M20 x 90	10.9	DIN 912
29	Civata	44	M6 x 16	8.8	DIN 912
30	Civata	2	M24 x 80	8.8	DIN 912
31	Kör Tapa	3	G 1 1/4"	-	DIN 908
32	Kör Tapa	3	G 3/8"	-	DIN 908
33	Kör Tapa	8	G 1/2"	-	DIN 908
35	Kör Tapa	2	G 3/4"	-	DIN 908
36	Kör Tapa	6	G 1/4"	-	DIN 908

ANA ÖLÇÜLER / MAIN DIMENSIONS			
KOVAN ÇAPI	TUBE DIAMETER	200	
ROD ÇAPI	ROD DIAMETER	140	
STROK	STROKE	130	
TEKNİK VERİLER / TECHNICAL DATA		ROD TARAFI / ROD SIDE	PİSTON TARAFI / PISTON SIDE
ÇALIŞMA BASINCI	OPERATING PRESSURE	350	240
TEST BASINCI	TEST PRESSURE	525	525
MAX. HIZ	MAX. WORKING SPEED	0,5 m/s	
ORTAM SICAKLIĞI	AMBIENT TEMPERATURE	-20C° / +80C	
ÇALIŞMA AKIŞKANI	PRESSURE MEDIUM		
MARKALAMA	MARKING INSTRUCTION	ATL	
BOYAMA	PAINTING PROCEDURE		
BOYA RENGİ	COLOR of PAINT	RAL ---	
BOYA KALINLIĞI	THICKNESS of PAINT		
AMBALAJLAMA	PACKING INSTRUCTION		
PRİZMATİK SINIR	BOUNDING BOX		

Bağlantı	Boru Ölçüsü	Diş Ölçüsü	Serisi
P1	Ø38x4	G1 1/4"	38 S / 38 S
P2	Ø38x4	G1 1/4"	38 S / 38 S
T1	Ø42x3	G1 1/4"	42 L / 42 L
T2	-	G 3/8"	KAPALI VERSİYON
X	Ø12x2	G 1/4"	12 L / 12 L
Y	Ø18x2	G 1/2"	18 L / 18 L
M....	DN4	G 1/4" - G1/2"	M16x2

UNLESS OTHERWİSE SPECIFIED
Geometrical tolerances are according to ISO 1101.
Indication of surface roughness is according to ISO 1302.
All sharp external edges 0.5X45°
All sharp internal edges R0.5 and ISO 1302, ±0,3
Geometrical tolerances for wided constructions to DIN EN ISO 12920 - B,F

Degree Ra (µm)	N1 0,025	N2 0,05	N3 0,1	N4 0,2	N5 0,4	N6 0,8	N7 1,6	N8 3,2	N9 6,3	N10 12,5	N11 25	N12 50
General Tolerance DIN 2768-M	05-6 ±0,1	6-30 ±0,2	30-120 ±0,3	120-400 ±0,5	400-1000 ±0,8				Angular Tolerance	<10° ±2°	>10° ±5°	

Drawn T.ULUDAĞ	Date 23.03.2020	File Name Klinker Soğutma Silindiri	Drawing Number 10106100
Checked M.SERER	Date 23.03.2020		
Approved M.SERER	Date 23.03.2020	Drawing Number of Customer M116145100200011N-N	Document Number 10106100

ATLASLIFT

Weight	Size	Sheet	Scale	Projection
523,027 kg	A1	1	1/3	

This document and all information and data disclosed herein and herewith are the confidential proprietary of property of ATLASLİFT and are not be used, reproduced or disclosed in whole or in part by anyone without written permission of ATLASLİFT.

Bu dokuman ve üzerindeki tum bilgi ve veri bundan boyle Atlasliftin tescilli varligi olup, yazili izni olmaksizin tamami ya da bir bolumu kullanilamaz, cogaltilamaz ya da verilemez.